SA40072 ñ *4 to 20mA Signal Conditioner*

The **SA40072** is a single channel signal conditioner, which provides a 4 to 20mA output. With the ability to interface directly with the complete line of *Spectron* single axis electrolytic tilt sensors (not included), the **SA40072** is the perfect solution for narrow or wide angle measurements. The open architecture design is ideal for space restrictive / OEM applications, while the 4-20mA output can be easily interfaced to most industrial /process industry controllers. The sensor is remotely mounted from the electronics, thereby providing maximum installation flexibility.

Dimensions *inches*

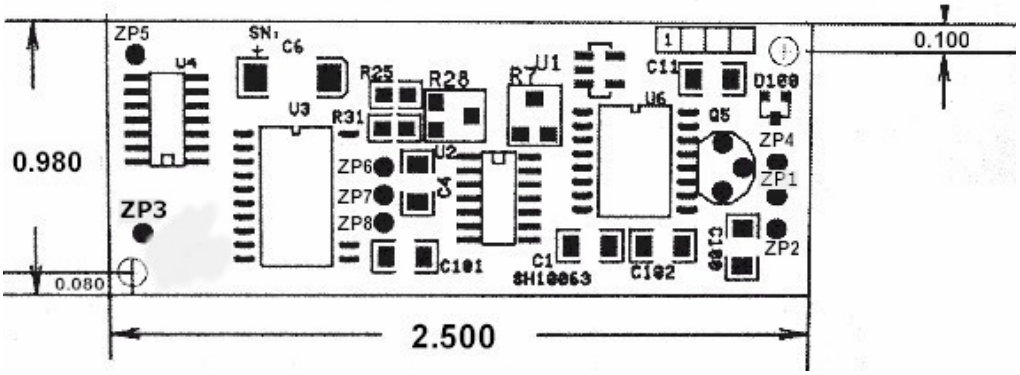

Mounting Holes ñ M2.5 (2 places)

General Specifications

Input voltage ....ÖÖÖ..ÖÖ...+14 to +24Vdc
Input current ....ÖÖ.ÖÖÖ.... 30mA (max)
Output .....ÖÖÖÖÖÖ..... 4-20mA
Load (maximum)
- 500 ohms @ +14Vdc input
- 1,000 ohms @ +24Vdc input

Operating Temp range ÖÖ.. -20 to +70 degC
Output noise (ripple)

Output (mA)	Load (Ohms)	Ripple (uA @ 600Hz)
-19	475	38
-12	475	2
-5	475	38

Input/Output Connections

PCB location	Function
ZP1, ZP3	Input Voltage
ZP2, ZP5	Ground
ZP4	4 – 20ma output
ZP6	sensor electrode A
ZP7	sensor electrode B
ZP8	sensor neutral (center)

Consult factory for technical information and ordering details!

駿融企業有限公司 JIN ZON ENTERPRISE CO., LTD.
104 台北市長安東路二段 171 號 4 樓之 3
4F-3, No. 171, Sec. 2, Chang An E. Rd., Taipei, Taiwan, R. O. C.
TEL: 886-2-27111093~5 FAX: 886-2-27310902
E-mail: jinzon@ms2.hinet.net Http:// www.jinzon.com.tw/