Sensor Housing – *Model #554*

for RG and CG Series Electrolytic Tilt Sensors

The ***RG and CG Series of Electrolytic Tilt Sensors*** are all available pre-installed into the following precision machined housing. This housing not only promotes ease of handling, but also provides protection from potentially hostile environments. The sensing element is encased in silicon rubber, which seals the sensor from moisture ingression, and helps prevent null drift by insulating the sensor from steep temperature gradients. The housing reference surfaces are leveled to within 9 arc seconds of the true horizontal and vertical planes, while the sensing element is mounted to within 1 arc minute of the reference surfaces. This not only simplifies the installation and alignment process, but virtually eliminates the effects of cross coupling when mounted parallel to the axis of rotation.

Housing = #554
Sensor = ***RG and CG Series***
Mounting orientation = **Single axis, horizontal**
Material = Al 6061 (aluminum)
Finish = Anodize

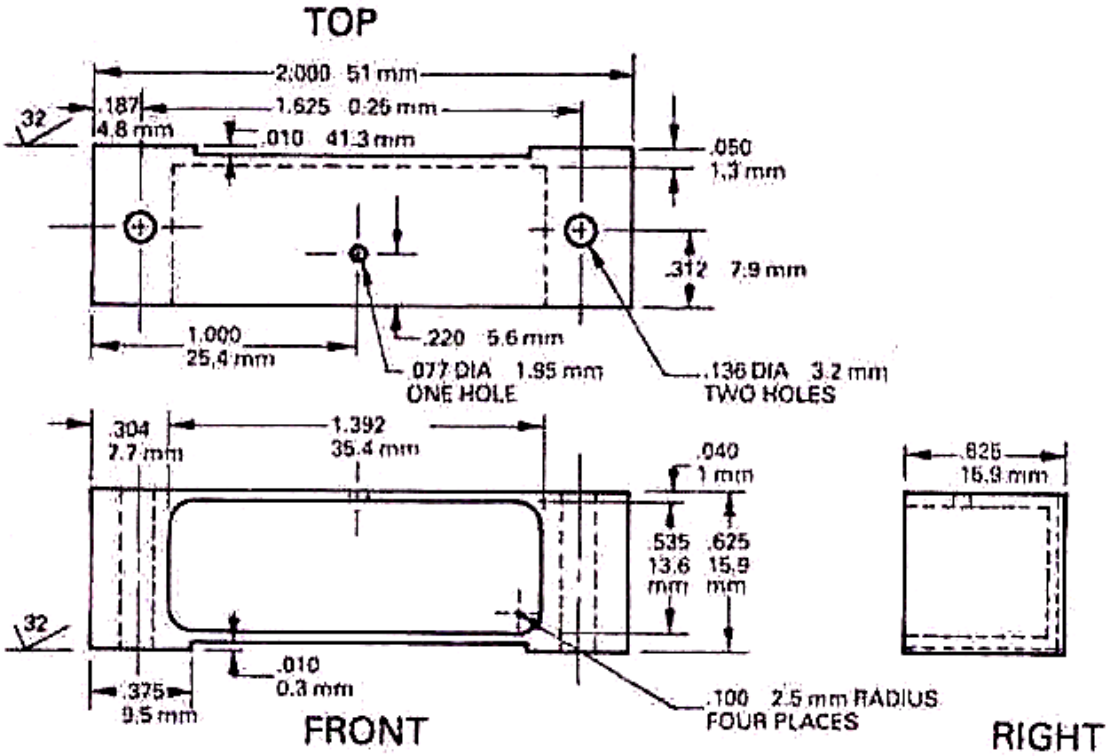

SPECTRON GLASS AND ELECTRONICS INC.
595 OLD WILLETS PATH
HAUPPAUGE NY 11788
PHONE: 631 582-5600
FAX: 631 582-5671

Specifications are subject to change without notice!

Doc.# SDS-111-1703