Press Force Sensor

0 … 100 N to 0 … 700 kN

Type 9323A … 9393A,
Type 9383AU0109,
Type 9393AU0109

The sensors of the Press Force series are ideal for measuring both dynamic and quasistatic forces. The factory preloading and adaptability of these practical designs ensure readiness for immediate use. They come in six different sizes which are divided in seven measuring ranges.

- Compression forces from 0 ... 100 N to 0 ... 700 kN
- Each individual sensor offers an extremely wide measuring range
- Calibration certificate for 3 measuring ranges: 100 %, 10 % and 1 %
- SCS calibration optional
- Simple mechanical adaptation with flanges on both ends
- Easily mounted in connecting rods or press plungers
- Factor of safety against overload of up to 100 when using lowest ranges

Description

These press force sensors are based on the piezoelectric measuring principle. The force acting on the quartz element generates at the output of the sensor a proportional electric charge, which is converted by the series-connected measuring amplifier (such as ICAM Type 5073A...) into a process signal suitable for evaluation (typically 0 ...10 V). Depending on the utilized type of sensor, tension forces of up to 16 % of the compression force range can also be measured. Although uncalibrated, these ranges are often used for detecting tool withdrawal forces, for example after press-fit processes.

Applications

The flange connections at both ends allow flexible mechanical adaptation of the sensor to suit the particular machine environment. The included centering rings also facilitate axial adjustment. The rotationally symmetrical shape of the press force sensor makes it ideal for mounting in or on the end of connecting rods or press plungers.

The piezoelectric element's special characteristic of approximately constant measuring accuracy over a substantial range allows the same press force sensor to be used for a wide spectrum of forces. The feasibility of switching measuring range when using suitable amplifiers (such as the ICAM Type 5073A...) bolsters this advantage while accommodating the general trend towards production and measuring stations handling a greater variety of parts. However, the wide-range measuring chain also offers critical advantages in laboratory applications, where frequent changes of sensor are the order of the day. And the extremely high degree of overload protection obviates involved protective measures when using the lowest measuring ranges.

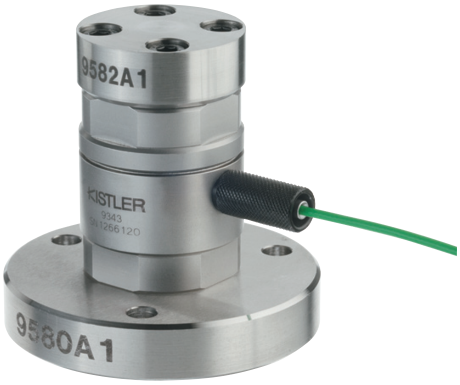

Fig. 1: Calibrating element with force distributing cap, flange and cable protector

9323_000-704e-09.13

Technical Data

Press Force Sensor	**Type**	**9323AA**	**9323A**	**9333A**	**9343A**	**9363A**	**9383A**	**9393A**
Measuring range F_z, max.	kN	0 … 10	0 … 20	0 … 50	0 … 70	0 … 120	0 ... 300	0 ... 700
Measuring ranges, calibrated [1]								
100 %	kN	0 … 10	0 … 20	0 … 50	0 … 70	0 … 120	0 ... 300	0 ... 700
10 %	kN	0 … 1	0 … 2	0 … 5	0 … 7	0 … 12	0 ... 30	0 ... 70
1 %	kN	0 … 0,1	0 … 0,2	0 … 0,5	0 … 0,7	0 … 1,2	0 ... 3	0 ... 7
Overload tension/ compression, max.	kN	–1,2/12	–2,4/24	–6/60	–14/84	–24/144	–60/360	–144/840
Threshold	N	0,01	0,02	0,02	0,02	0,02	0,04	0,04
Sensitivity	pC/N	–9,6	–3,9	–3,9	–3,9	–3,8	–1,9	–1,9
Linearity incl. Hysteresis [2]	%FSO	≤±0,5						
Torque M_z, max.	N·m	5	5	14	31	145	783	1 980
Sensitivity temperature coefficient	%/°C	0,05	–0,02					
Bending moment $M_{x,y}$, max.								
at F_z = 100 %	N·m	0,9	0,9	10	10	232	872	1 100
at F_z = 0 %	N·m	23	23	65	135	638	3 407	9 940
Shear force $F_{x,y}$, max. [3] (at F_z = 0)	kN	0,62	0,62	1	1,8	5,8	16,9	31,4
Crosstalk $F_{x,y} \rightarrow F_z$	N/N	<0,05	<0,03	<0,03	<0,07	<0,06	<0,02	<0,02
$M_{x,y} \rightarrow F_z$	N/N·m	<0,5	<0,5	<0,3	<0,3	<0,3	<0,3	<0,3
Rigidity c_z	N/µm	≈1 300	≈1 200	≈2 300	≈2 600	≈4 400	≈7 900	≈10 000
Natural frequency foz	kHz	>74,5	>72	>55	>47	>35	>17	>11,3
Operating temperature range	°C	–40 … 120						
Connector		KIAG 10-32 neg.						
Protection class EN60529 [4]								
with connected cable	IP	65						
with cable Type 1983AD... and welded sensor	IP	67						
Case material	DIN	1.4542						
Weight (without cable)	g	50	47	137	240	800	6 490	18 663

[1] Calibrated in compression direction only. Tensile force as specified under overload measurable, but not calibrated
[2] Relative to FSO of the calibrated (!) measuring range
[3] For application of force in plane of flange

General Mounting Instructions

- The flange bearing surfaces that transmit the force to the sensor must be kept flat and free from dirt and grease
- The centering seats on both ends of the sensor allow very accurate coaxial mounting using the supplied centering rings.
- The sensor can be mounted using the central female thread or tapped holes of the pitch circle.
- Do not exceed the bending moments, torques and shear force specified in the table.
- Whenever possible the force should be transferred axially rather than laterally.
- See pages 4 and 5 for other mounting options.

Customized Measuring Range

Types 9383A and 9393A can also be customized prestressed. The measuring range can thus be designed for a specific tension-/pressure range. The graphic shows the relationship between tension-/pressure range. The type designation for the customer specific sensors will be extended with U0109.

Technical Data

Press Force Sensor	Type	9383AU0109
Compression force: Measuring range Fz, max	kN	–50 ... 500 [a]
Overload Fz, max.	kN	–55/550 [a]
Tensile force: Measuring range Fz, max	kN	–250 ... 250 [b]
Overload Fz, max.	kN	–275/275 [b]
Calibrated Range Fz,	kN	customized [a] [b] [c]
Linearity incl. Hysteresis	%FSO	≤±1 [a] [b]

[a] Minimal Pretension: F_{v1} = 100 kN at max. compression force of Fz = 500 [kN]

[b] Maximal Pretension: F_{v2} = 400 kN at max. tensile force of Fz = –250 [kN]

[c] Compression- and tensile force can be calibrated to the specified maximum range.

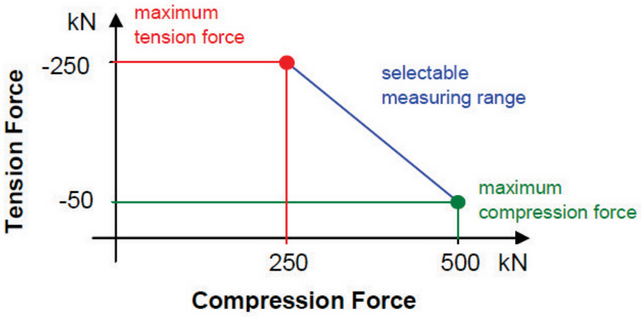

Technical Data

Press Force Sensor	Type	9393AU0109
Compression force: Measuring range Fz, max	kN	–100 ... 950 [a]
Overload Fz, max.	kN	–110/1100 [a]
Tensile force Measuring range Fz, max	kN	–450 ... 600 [b]
Overload Fz, max.	kN	–550/660 [b]
Calibrated Range Fz,	kN	customized [a] [b] [c]
Linearity incl. Hysteresis	%FSO	≤±1 [a] [b]

a) Minimal Pretension: F_{v1} = 200 kN at max. Compression force of Fz = 1 000 [kN]

b) Maximal Pretension: F_{v2} = 600 kN at max. Tensile force of Fz = –450 [kN]

c) Compression - and Tensile force can be calibrated to the specified maximum range.

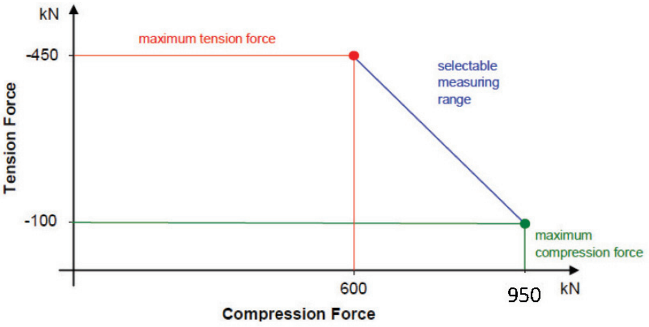

Dimensions Type 9323A/AA ... 9383A

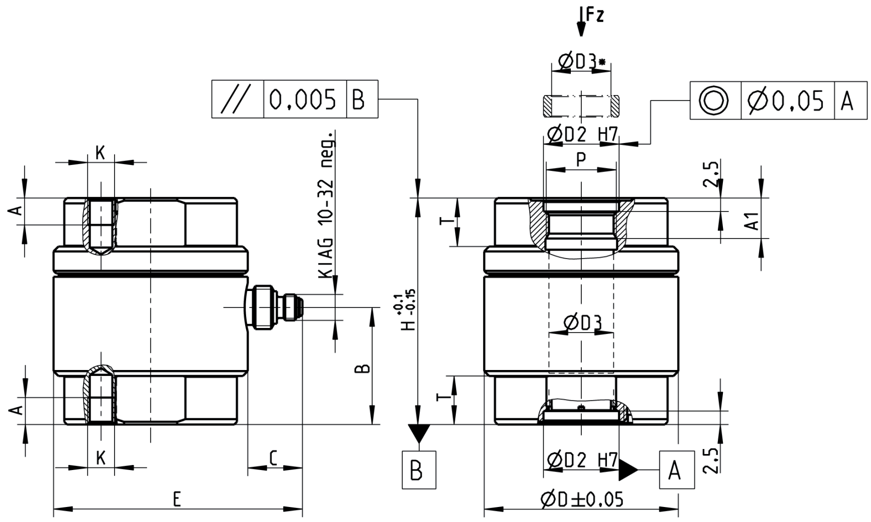
Fz
ØD3*
// 0,005 B
◎ Ø0,05 A
ØD2 H7
P
K
A
KIAG 10-32 neg.
T
2,5
A1
ØD3
H -0.1 -0.15
B
C
E
ØD2 H7
ØD±0,05

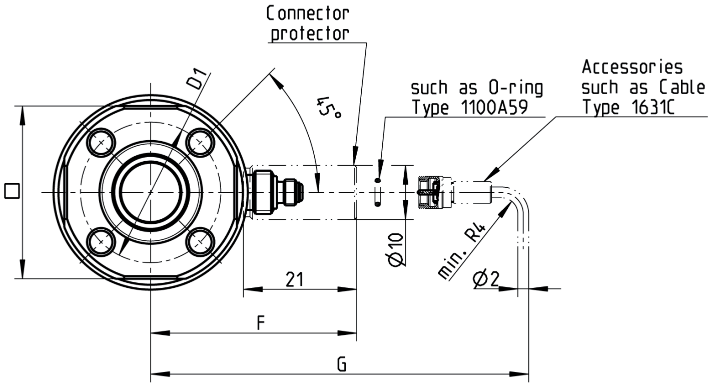
Connector protector
D1
45°
such as O-ring Type 1100A59
Accessories such as Cable Type 1631C
□
Ø10
min. R4
Ø2
21
F
G

Type 9323A/9333A/9343A/9363A

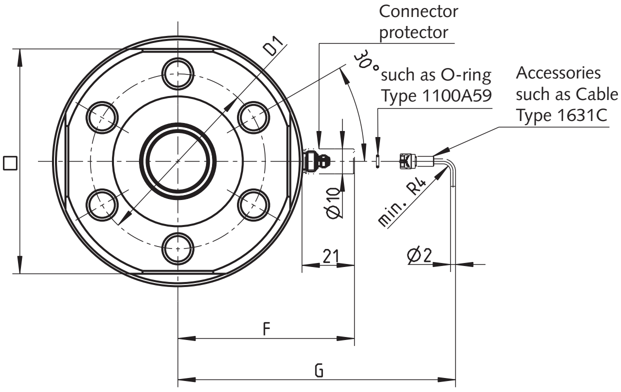
Connector protector
D1
30°
such as O-ring Type 1100A59
Accessories such as Cable Type 1631C
□
Ø10
min. R4
21
Ø2
F
G

Type 9383A

Dimensions Type 9393A

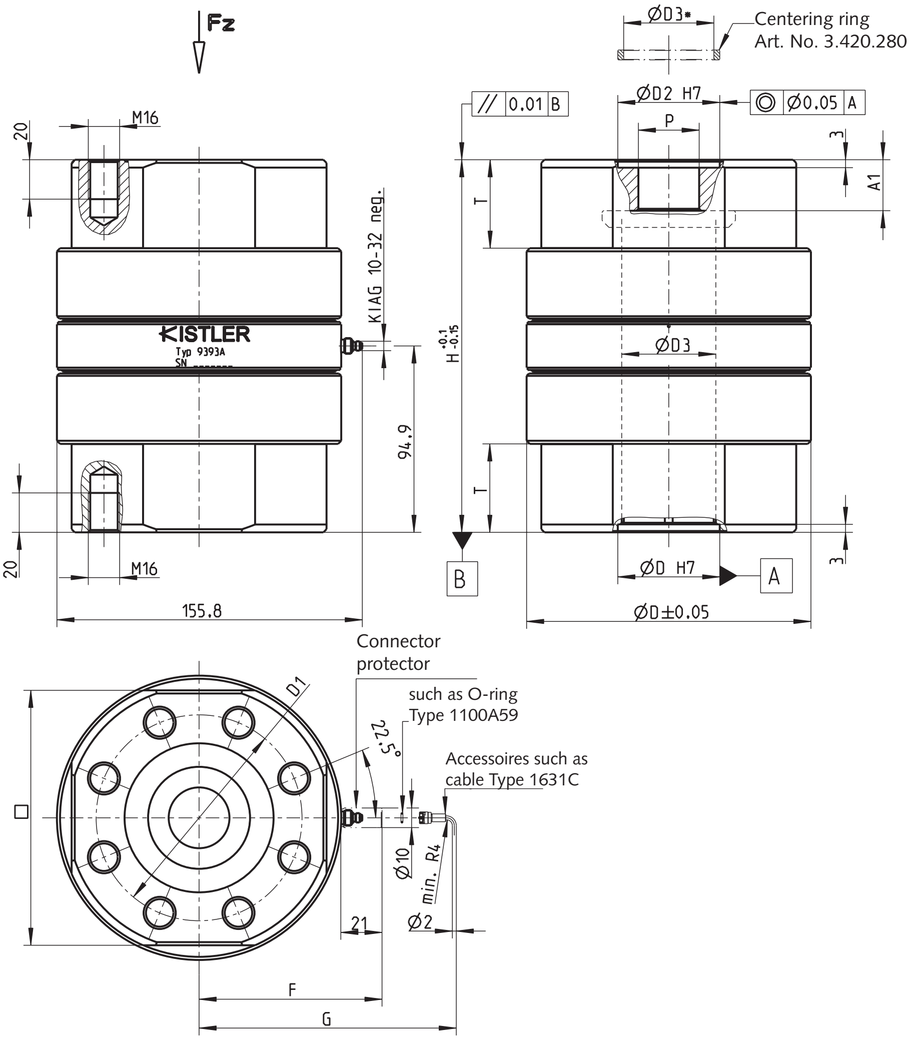
Fz
ØD3*
Centering ring
Art. No. 3.420.280
// 0.01 B
ØD2 H7
◎ Ø0.05 A
P
3
A1
20
M16
KIAG 10-32 neg.
KISTLER
Typ 9393A
SN
H -0.1 -0.15
T
ØD3
94.9
T
20
M16
B
ØD H7
A
3
155.8
ØD±0.05
Connector protector
such as O-ring Type 1100A59
D1
22.5°
Accessoires such as cable Type 1631C
□
Ø10
min. R4
21
Ø2
F
G

Dimensions in mm

Type	D	D1	D2	D3	D3*	□	H	A	A1	B	C	E	F	G	K	P	T
9323A/AA	20	14	6	4	4	17	26	3	7	13,2	7,4	27,4	–	36	M3	M5x0,5	6
9333A	30	21	10	8	8	26	34	4	6,5	16,6	10,1	40,1	36	43,5	M4	M9x0,5	8
9343A	36	26	14	11	11	32	42	5	8,5	21,7	10,2	46,2	39	46,5	M5	M13x1	9
9363A	54	40	21	17	17	48	60	8	12,5	32,5	10,4	64,4	48	56	M8	M20x1,5	13
9383A	100	70	30	23,5	23,5	90	130	14	24,5	68,6	10,7	110,7	70,7	77,7	M12	S28x2	30
9393A	145	105	52	45,5	45,5	130	190	20	26	94,9	10,8	155,8	93,3	131,2	M16	31	45

* Free access with mounted centering rings

A: Direct Mounting Using Integral Mounting Screw and Threaded Bushing

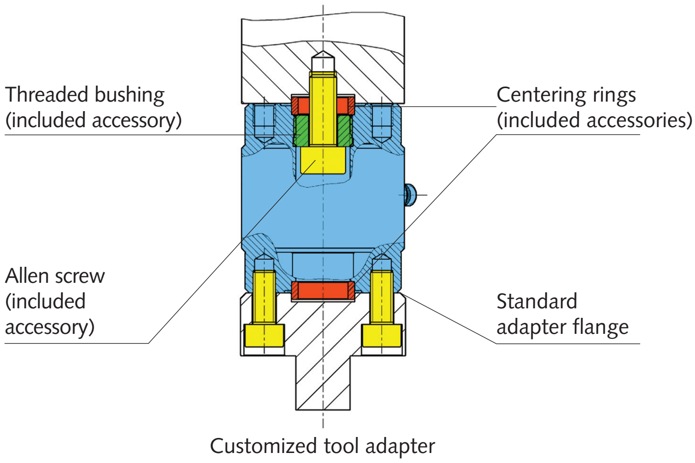
Threaded bushing
(included accessory)
Centering rings
(included accessories)
Allen screw
(included
accessory)
Standard
adapter flange
Customized tool adapter

B: Direct Mounting Using Integral Fine Thread

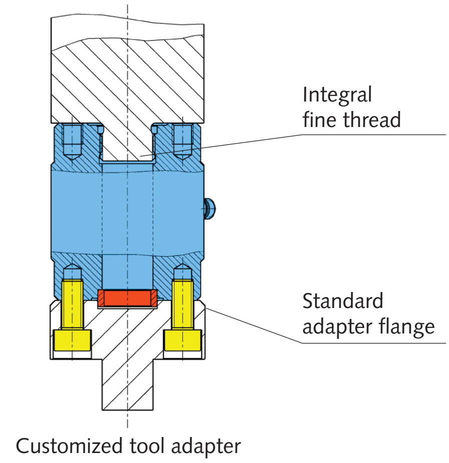
Integral
fine thread
Standard
adapter flange
Customized tool adapter

C: Mounting Using Straight Shank Adapter

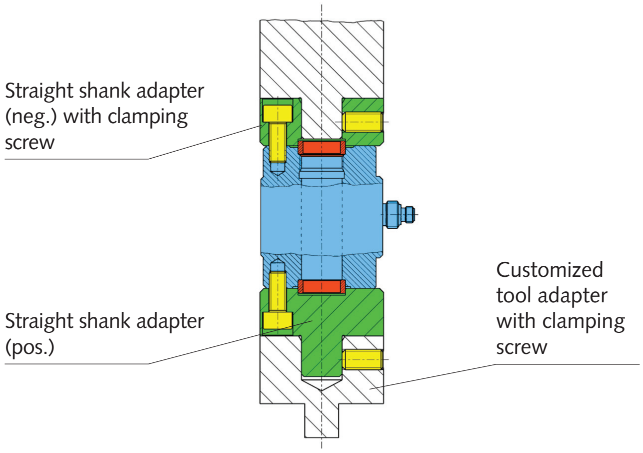
Straight shank adapter
(neg.) with clamping
screw
Straight shank adapter
(pos.)
Customized
tool adapter
with clamping
screw

D: Mounting Using Threaded Adapter

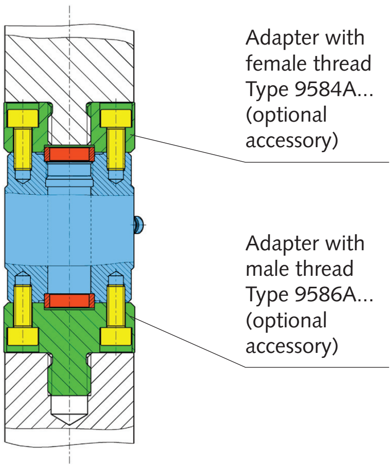
Adapter with
female thread
Type 9584A...
(optional
accessory)
Adapter with
male thread
Type 9586A...
(optional
accessory)

E: Mounting Using Adapter Disk/Flange

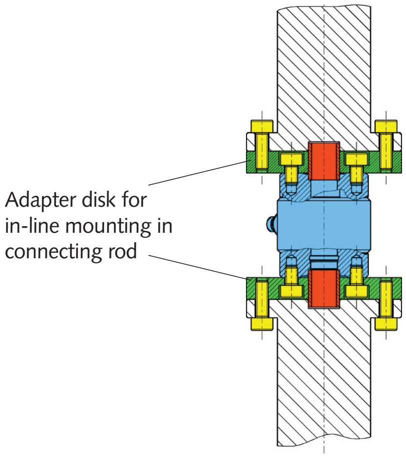
Adapter disk for
in-line mounting in
connecting rod

F: Direct Mounting Using Integral Flange

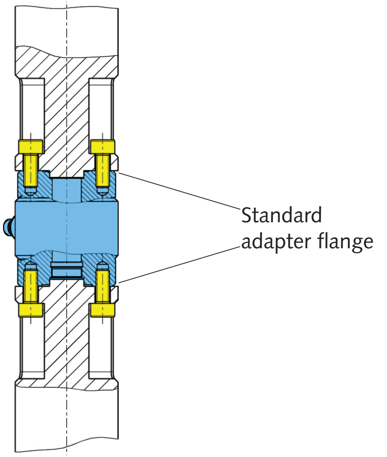
Standard
adapter flange

G: Adapter for Deep Drawing Tool with Central Ejection Tool

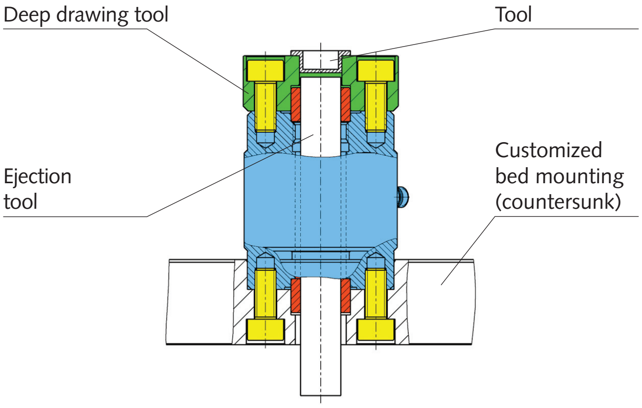
Deep drawing tool
Tool
Ejection tool
Customized bed mounting (countersunk)

H: Adapter for Punching Tool with Central Ejection Bore

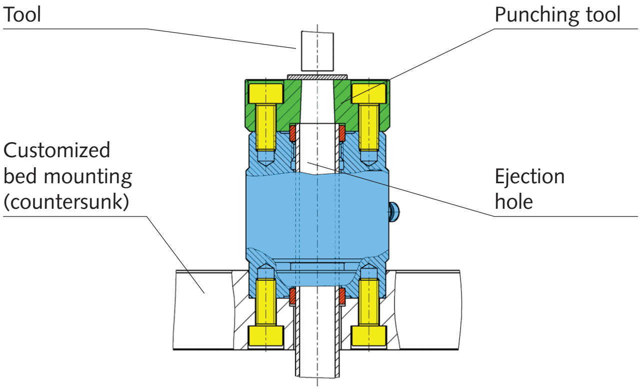
Tool
Punching tool
Customized bed mounting (countersunk)
Ejection hole

I: Adapter Riveting Tool

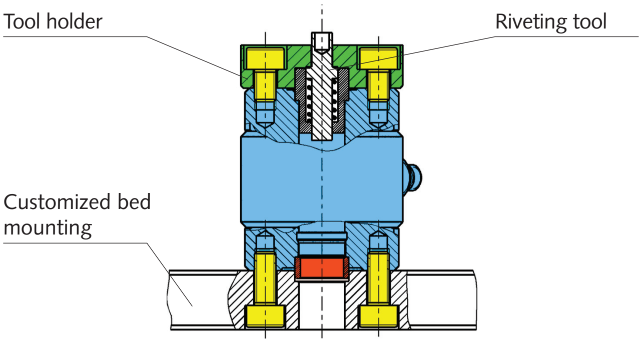
Tool holder
Riveting tool
Customized bed mounting

J: Calibrating Element with Force Distributing Cap and Flange

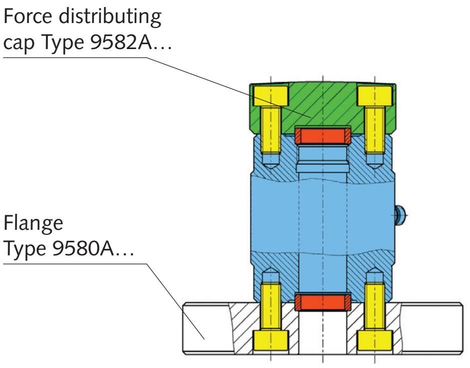
Force distributing cap Type 9582A…
Flange Type 9580A…

As reference sensor under a press

Drawings of Mechanical Accessories (Scope of Delivery)

Threaded bushing

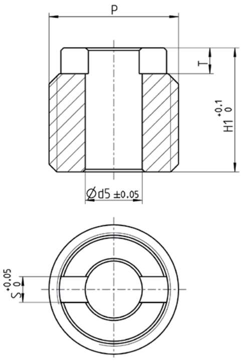
P
T
H1 +0.1 0
Ød5 ±0.05
S +0.05 0

Art. No. 3.315.076

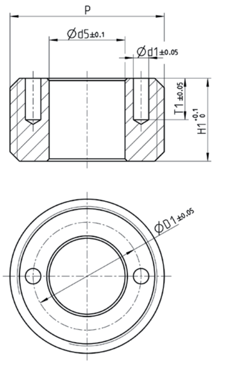
P
Ød5±0.1
Ød1±0.05
T1±0.05
H1 +0.1 0
ØD1±0.05

Art. No. 3.315.053/054/055/087

Sensor Type	Art. No	D1	d1	d5	H1	P	T	T1	S
9323A/AA	3.315.076	–	–	2,2	4,8	M5x0,5	1	–	1
9333A	3.315.053	6,5	1,1	4,3	4,5	M9x0,5	–	3	–
9343A	3.315.054	9,1	1,3	6,4	7	M13x1	–	3,5	–
9363A	3.315.055	14,5	1,6	10,5	10,5	M20x1,5	–	5	–
9383A	3.315.087	21	2,5	16,5	24,5	S28x2-8e	–	5	–
9393A	–	–	–	–	–	–	–	–	–

Hexagon socket screw

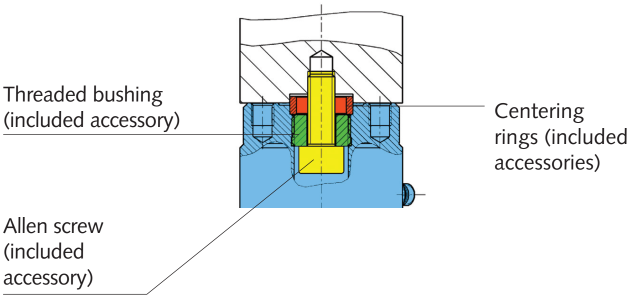
Threaded bushing (included accessory)
Centering rings (included accessories)
Allen screw (included accessory)

Sensor Type	Art. No	D1
9323A/AA	6.120.235	M2x12
9333A	6.120.102	M4x12
9343A	6.120.122	M6x18
9363A	6.120.066	M10x25
9383A	6.120.101	M16x40
9393A	6.120.136	M30x60

Centering Ring

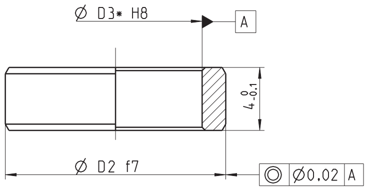
Ø D3* H8
A
4 0 -0.1
Ø D2 f7
◎ Ø0.02 A

Sensor Type	Art. No.	D2	D3*
9323A/AA	3.420.196	6	4
9333A	3.420.179	10	8
9343A	3.420.180	14	11
9363A	3.420.181	21	17
9383A	3.420.197	30	23,5
9393A	3.420.280	52	45,5

* Free access with mounted centering rings

Drawings of Mechanical Accessories (Optional)

Flange

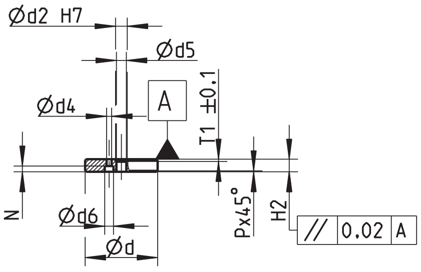
Ød2 H7
Ød5
Ød4
A
T1 ±0.1
N
Ød6
Ød
Px45°
H2
// 0.02 A

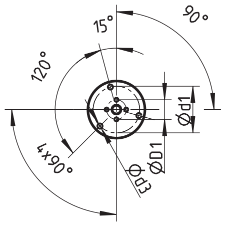
15°
90°
120°
4x90°
Ød1
ØD1
Ød3

Type 9580A9/A0/A1/A2

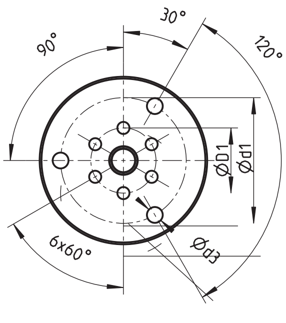
30°
90°
120°
ØD1
Ød1
6x60°
Ød3

Type 9580A4

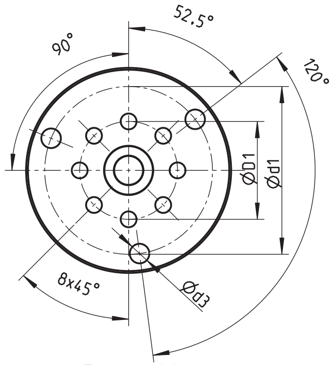
52,5°
90°
120°
ØD1
Ød1
8x45°
Ød3

Type 9580A6

Sensor Type	Flange Type	D1	d	d1	d2	d3	d4	d5	d6	H2	T1	N
9323A/AA	**9580A9**	14	40	30	6	4,5	3,2	4,5	5,6	8	2	3
9333A	**9580A0**	21	62	50	10	5,5	4,3	8,5	7,5	11	2	5
9343A	**9580A1**	26	70	55	14	6,6	5,3	12	9	13	2	6
9363A	**9580A2**	40	100	78	21	13,5	8,4	18	14	22	2	9
9383A	**9580A4**	70	180	135	30	17	13	25	20	30	2,5	13
9393A	**9580A6**	105	220	180	52	21	17	31	26	48	2,5	17

Force Distributing Cap

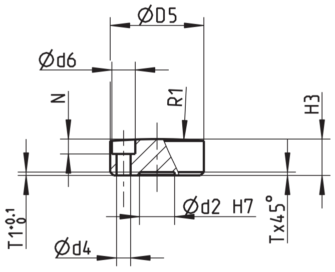
ØD5
Ød6
N
R1
H3
Ød2 H7
T1+0.1 0
Ød4
Tx45°

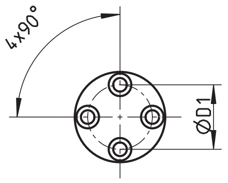

Type 9582A9/A0/A1/A2

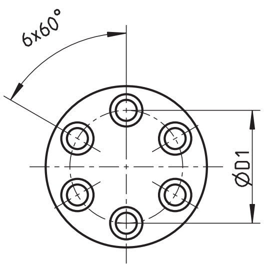

Type 9582A4

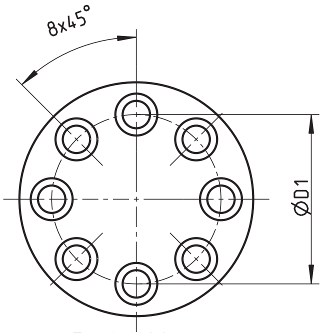

Type 9582A6

Sensor Type	Force Distr. Cap Type	D1	D5	d2	d4	d6	H3	T1	N	R1
9323A/AA	**9582A9**	14	20	6	3,2	5,6	8,5	2	3,5	200
9333A	**9582A0**	21	30	10	4,3	7,5	11	2	5	250
9343A	**9582A1**	26	36,5	14	5,3	9	13	2	6	300
9363A	**9582A2**	40	56	21	8,4	14	22	2	9	350
9383A	**9582A4**	70	100	30	13	20	50	2,5	13,5	550
9393A	**9582A6**	105	145	52	17	26	80	2,5	19	850

Adapter with Female Thread

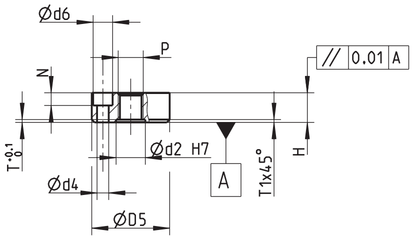
Ød6
P
N
// 0.01 A
$T^{+0.1}_{0}$
Ød2 H7
A
T1x45°
H
Ød4
ØD5

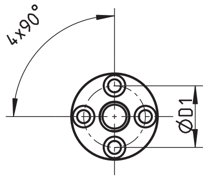

Type 9584A9/A0/A1/A2

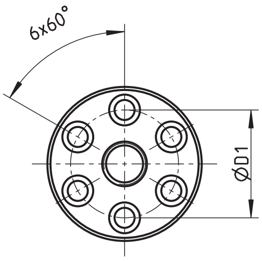

Type 9584A4

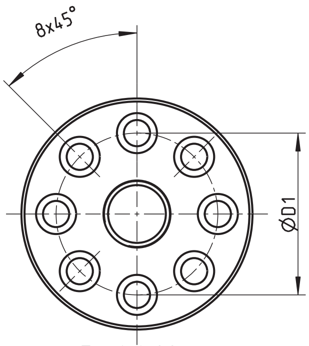

Type 9584A6

Sensor Type	Adapter Type	D1	D5	d2	d4	d6	H	N	P	T
9323A/AA	**9584A9**	14	20	6	3,2	5,6	8	3	M4	2
9333A	**9584A0**	21	30	10	4,3	7,5	11	5	M8	2
9343A	**9584A1**	26	36,5	14	5,3	9	14	7	M12	2
9363A	**9584A2**	40	56	21	8,4	14	21	9	M18	2
9383A	**9584A4**	70	100	30	13	20	30	13,5	M27	2,5
9393A	**9584A6**	105	150	52	17	26	48	17	M42	2,5

Adapter with Male Thread

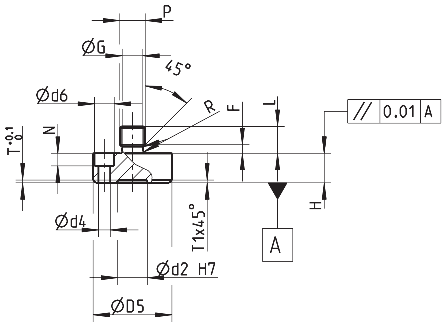
P
ØG
45°
Ød6
R
F
L
// 0.01 A
$T^{+0.1}_{0}$
N
Ød4
T1x45°
A
H
Ød2 H7
ØD5

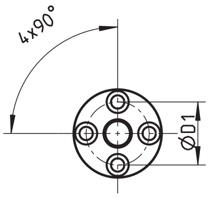

Type 9586A9/A0/A1/A2

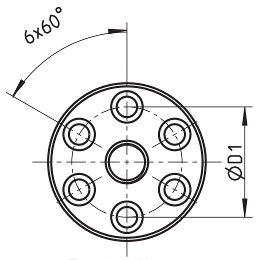

Type 9586A4

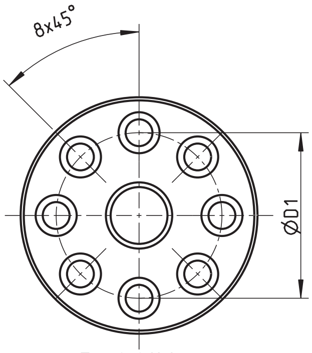

Type 9586A6

Sensor Type	Adapter Type	D1	D5	d2	d4	d6	H	N	P	L	T
9323A/AA	**9586A9**	14	20	6	3,2	5,6	8	3	M4	5	2
9333A	**9586A0**	21	30	10	4,3	7,5	11	5	M8	9	2
9343A	**9586A1**	26	36,5	14	5,3	9	14	7	M12	12	2
9363A	**9586A2**	40	56	21	8,4	14	21	9	M18	19	2
9383A	**9586A4**	70	100	30	13	20	30	13,5	M27	26	2,5
9393A	**9586A6**	105	150	52	17	26	48	17	M42	43	2,5

Electrical Connection

We recommend using Kistler cables exclusively to prevent insulation resistance, triboelectricity and cable breakage problems from the outset.

Sensor Type 9323A ... 9393A	Connecting Cable Type 1631C...	Charge Amplifier Type 5073A111 [2)]	maXYmos Type 5867B... [2)]

Ordering Code **Included Accessories**	**Type/Art. No.**
Press Force Sensor F_z 0 ... 10 kN	**9323AA**
• Threaded bushing	3.315.076
• Socket head cap screw M2x12	6.120.235
• Centering ring (x2)	3.420.196
Press Force Sensor F_z 0 ... 20 kN	**9323A**
• Threaded bushing	3.315.076
• Socket head cap screw M2x12	6.120.235
• Centering ring (x2)	3.420.196
Press Force Sensor F_z 0 ... 50 kN	**9333A**
• Connector protector	3.414.366
• Threaded bushing	3.315.053
• Socket head cap screw M2x12	6.120.102
• Centering ring (x2)	3.420.179
Press Force Sensor F_z 0 ... 70 kN	**9343A**
• Connector protector	3.414.366
• Threaded bushing	3.315.054
• Socket head cap screw M2x12	6.120.122
• Centering ring (x2)	3.420.180
Press Force Sensor F_z 0 ... 120 kN	**9363A**
• Connector protector	3.414.366
• Threaded bushing	3.315.055
• Socket head cap screw M2x12	6.120.066
• Centering ring (x2)	3.420.181
Press Force Sensor F_z 0 ... 300 kN	**9383A**
Press Force Sensor [1)]	**9383AU0109**
• Connector protector	3.414.366
• Threaded bushing	3.315.087
• Socket head cap screw M16x40	6.120.101
• Centering ring (x2)	3.420.197
Press Force Sensor F_z 0 ... 700 kN	**9393A**
Press Force Sensor [1)]	**9393AU0109**
• Connector protector	3.414.366
• Socket head cap screw M30x40	6.120.136
• Centering ring (x2)	3.420.280

[1)] Measuring and calibrated range customer-specific, on request

[2)] Without using a charge attenuator Type 5361A... the force measuring range with Type 9393A is limited, refer also to data sheet type 5073A, Doc. No. 000-524

Optional Accessories	**Type**
• Connecting cable, KIAG 10-32 pos. – BNC pos.	1631C...
• Connecting cable, KIAG 10-32 pos. – TNC pos.	1633C...
• Connecting cable, KIAG 10-32 pos. – KIAG 10-32 pos.	1635C...
• Connecting cable, KIAG 10-32 pos. int. – BNC pos.	1939A...
• Connecting cable, KIAG 10-32 pos. int. – TNC pos.	1941A...
• Connecting cable, KIAG 10-32 pos. – KIAG 10-32 pos.,with metal sheath	1957A
• Fluoropolymer connecting cable, KIAG 10-32 pos. int. – BNC pos.	1983AD
• Flange	9580A...
• Force distributing cap	9582A...
• Adapter with female thread	9584A...
• Adapter with male thread	9586A...
• SCS calibration	9950F1C

Tel. +41 52 224 11 11, Fax +41 52 224 14 14, info@kistler.com, www.kistler.com